POLITEKNIK

A KLINGER Company

manufacturing

Bellows can be manufactured in various materials such as 304, 316,321, 309S, 310S, 904L, Dublex 2205, Duplex 2507, Inconel 625 and other nickel alloys.

quality

Politeknik is fully committed to a quality management process with quality as a fundamental business principle. Core of the process is achieving customer satisfaction by meeting our internal and customer requirements on time.

design

Designing for a wide range of parameters allows product solutions to be developed both quickly and effectively.

With over 40 years of experience in the design and manufacturing of expansion joints, our engineering group is proud of offering fast and economical solutions with high quality, utilizing modern technologies.

Politeknik has been a part of Klinger Group since 2016.

KLINGER was founded in 1886 as a family business and is known as a pioneer in sealing technology. Serving a global client base, it delivers trusted products worldwide for petro-chemical, chemical, process industries, infrastructure, and transportation applications. Today, the Group comprises of 40 companies and more than 60 manufacturing, distribution and service hubs worldwide.

CONTENT

POLITEKNIK-KLINGER » 2

EXPANSION JOINTS » 2
- WELD-END » 4
  PN6 | PN10 | PN16
- FIXED FLANGE END » 7
  PN6 | PN10 | PN16
- FLOATING FLANGE END » 10
  PN6 | PN10 | PN16
- RUBBER » 13
- CENTRAL HEATING SYSTEM » 14
- EXTERNALLY PRESSURIZED » 15
- SEISMIC WITH LIMIT ROD » 16
- SEISMIC WITH GIMBAL » 17

OTHERS
- VIBRATION ABSORBERS » 18
- BRAIDED/FAN-COIL FLEXIBLE METAL HOSE CONNECTORS » 19

LENS EXPANSION JOINTS » 20

TYPE APPROVAL CERTIFICATE
- BLNC I » 26
- BLNC I F » 27
- BLNC II » 28
- BLNC II F » 29
- BLNC III » 30
- BLNC III F » 31
- BLNC IV » 32
- BLNC IV F » 33
- BLNC V » 34
- BLNC VI » 35
- RF 30 AXIAL - RF 60 AXIAL » 36
- FF 30 AXIAL - FF 60 AXIAL » 37
- BLNC VIII » 38
- BLNC IX » 39

FABRIC /RECTANGULAR » 40

POLITEKNIK PART NUMBER DESCRIPTIONS » 41

Expansion Joints

Expansion joint is a device containing one or more flexible element they are used to absorb dimensional changes such as those caused by thermal expansion or contraction of a pipeline, duct or vessel.

Bellows type expansion joints require little to no maintenance and are capable of absorbing axial, lateral and angular types of movements in a compact space.

Since expansion joints are generally custom designed, they are highly specialized products. It is necessary to supply the expansion joint manufacturer with the necessary information for correct design. As a minimum the following information must be given: Diameter, design movements, pressure and temperature, materials of construction, connection type and length.

Manufacturing of expansion joints

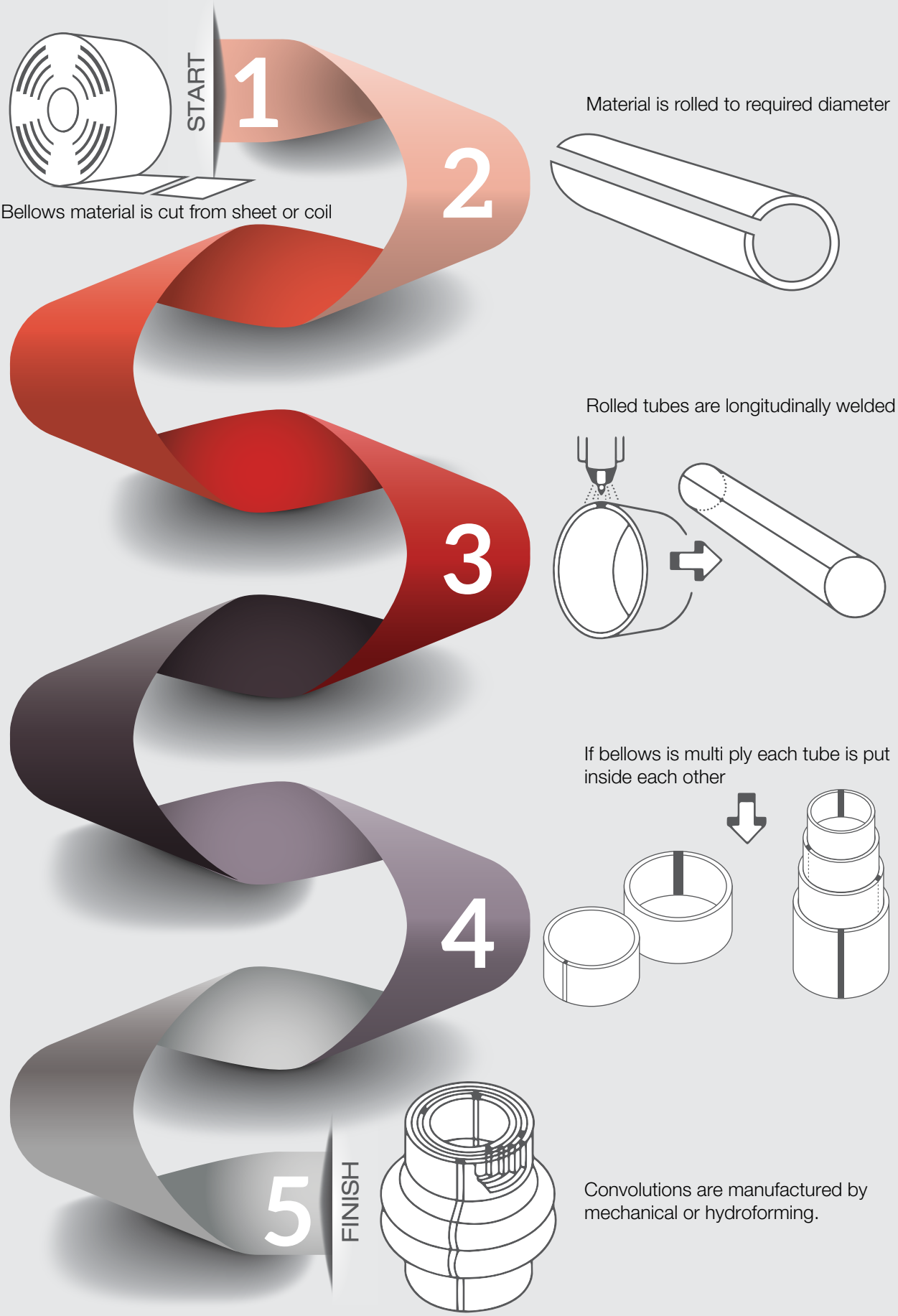

Bellows Material
304ss - 316ss 321ss

Weld End Material
Carbon Steel

Design Pressure
6barg

Design Temperature
400°C

Movements are non-concurrent

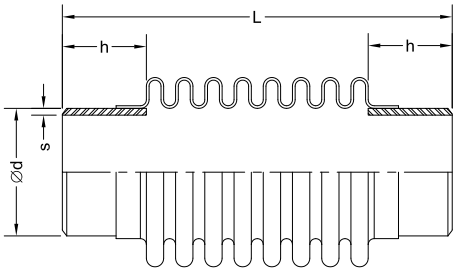

Nominal Diameter (DN)		Movements (mm) Axial (+/-)	Movements (mm) Lateral (+/-)	Length (L) (mm)	Spring Rates (N/mm) Axial	Spring Rates (N/mm) Lateral	d (mm)	h (mm)	s (mm)	Effective Area (cm2)
25	1"	15	6	180	62	31	33,7	50	3	18
32	1 1/4"	15	6	180	62	31	42,4	50	3	18
40	1 1/2"	15	7	185	54	31	48,3	50	3	23
50	2"	15	6	170	32	43	60,3	50	4	37
65	2 1/2"	15 30	6 11	175 230	34 53	60 32	76,1	50	4	58
80	3"	15 30	3 12	160 260	41 66	145 37	88,9	50	4	80
100	4"	15 30	3 9	190 260	71 72	301 82	114,3	60	5	129
125	5"	15 30	3 8	190 265	84 78	511 121	139,7	60	5	185
150	6"	15 30	2 7	235 285	105 63	814 187	165	80	5	268
200	8"	15 30	2 7	250 310	146 91	1279 310	219,1	80	5	451
250	10"	15 30	2 7	290 365	154 86	2049 369	273	100	6	682
300	12"	15 30 37,5	2 6 9	320 400 450	355 197 162	4380 800 428	323,9	100	6	945
350	14"	15 30 37,5	2 6 8	310 400 450	386 214 175	5669 1036 554	355,6	100	6	1127
400	16"	15 30 37,5	2 5 8	320 370 420	250 178 139	4046 1520 728	406,4	100	7	1479
450	18"	15 30 37,5	2 4 6	320 370 420	307 219 170	6177 2321 1111	457	100	8	1839
500	20"	15 30 37,5	2 4 6	320 370 420	279 199 155	6909 2596 1243	508	100	8	2264
600	24"	15 30 37,5	2 4 6	320 390 450	530 331 265	18745 5003 2379	610	100	8	3227
700	28"	15 30 37,5	2 5 5	340 425 440	419 262 262	14565 3797 3363	711	100	8	4372
800	32"	15 30 37,5	1 3 3	320 380 410	755 503 431	45102 14411 9278	813	100	8	5705
900	36"	15 30 37,5	1 3 4	335 405 450	1194 796 682	70128 22008 13061	914	100	8	7201
1000	40"	15 30 37,5	1 2 4	340 380 450	1037 829 592	70455 35891 13993	1016	100	8	8885

WELD END
PN6

Bellows Material
304ss-316ss 321ss

Weld End Material
Carbon Steel

Design Pressure
10 barg

Design Temperature
400 °C

Movements are non-concurrent

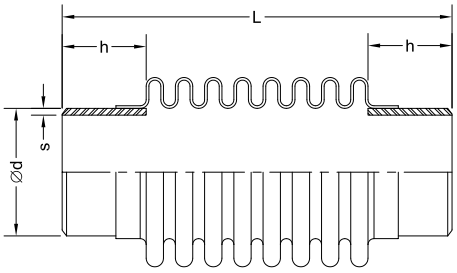

Nominal Diameter (DN)		Movements (mm) Axial (+/-)	Lateral (+/-)	Length (L) (mm)	Spring Rates (N/mm) Axial	Lateral	d (mm)	h (mm)	s (mm)	Effective Area (cm2)
25	1"	15	6	180	62	31	33,7	50	3	18
32	1 1/4"	15	6	180	62	31	42,4	50	3	18
40	1 1/2"	15	7	225	93	30	48,3	50	3	23
50	2"	15	5	185	62	57	60,3	50	4	38
65	2 1/2"	15	4	185	68	95	76,1	50	4	58
		22,5	6	215	98	77				
		30	10	240	105	56				
80	3"	15	4	185	66	124	88,9	50	4	80
		22,5	6	215	90	95				
		30	10	235	90	70				
100	4"	15	3	200	113	333	114,3	60	5	129
		22,5	5	230	88	159				
		30	7	265	109	118				
125	5"	15	2	200	134	641	139,7	60	5	187
		22,5	4	230	104	274				
		30	7	265	107	169				
150	6"	15	3	245	152	936	165	80	5	268
		22,5	4	270	118	448				
		30	6	315	127	245				
200	8"	15	3	265	211	1422	219,1	80	5	460
		22,5	5	305	158	584				
		30	7	330	140	385				
250	10"	15	2	310	292	2687	273	100	6	683
		22,5	5	360	195	888				
		30	7	395	159	499				
300	12"	15	2	310	355	4380	323,9	100	6	945
		22,5	3	360	254	1567				
		30	6	395	197	840				
350	14"	15	2	320	582	8653	355,6	100	6	1141
		22,5	4	370	364	2417				
		30	5	405	323	1509				
400	16"	15	2	320	474	7707	406	100	7	1483
		22,5	3	360	339	3242				
		30	5	400	296	1867				
450	18"	15	1	330	587	11842	457	100	8	1841
		22,5	3	375	714	7176				
		30	4	420	555	3626				
500	20"	15	2	340	758	14195	508	100	8	2268
		22,5	3	385	649	8039				
		30	4	430	505	3733				

WELD END
PN10

Bellows Material
304ss - 316ss 321ss

Weld End Material
Carbon Steel

Design Pressure
16barg

Design Temperature
400°C

Movements are non-concurrent

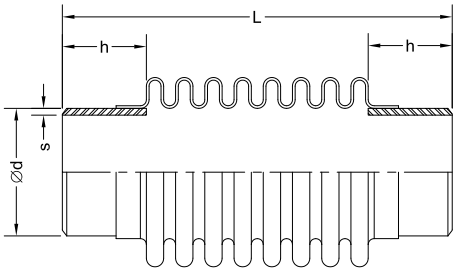

Nominal Diameter (DN)		Movements (mm) Axial (+/-)	Movements (mm) Lateral (+/-)	Length (L) (mm)	Spring Rates (N/mm) Axial	Spring Rates (N/mm) Lateral	d (mm)	h (mm)	s (mm)	Effective Area (cm2)
50	2"	15	4	185	117	109	60,3	50	4	38
		22,5	4	215	126	64				
65	2 1/2"	15	3	185	128	179	76,1	50	4	58
		22,5	7	215	124	97				
		30	8	240	182	99				
80	3"	15	3	185	124	231	88,9	50	4	80
		22,5	7	215	123	129				
		30	9	245	166	121				
100	4"	15	3	200	145	484	114,3	60	5	129
		22,5	4	230	146	266				
		30	8	265	161	173				
125	5"	15	3	200	168	808	139,7	60	5	186
		22,5	5	230	126	333				
		30	7	265	171	267				
150	6"	15	2	245	350	2166	165	80	5	268
		22,5	4	270	171	648				
		30	7	315	191	379				
200	8"	15	2	265	513	3132	219,1	80	5	456
		22,5	4	305	338	1242				
		30	5	340	300	817				
250	10"	15	2	310	559	5149	273	100	6	684
		22,5	4	360	372	1517				
		30	5	395	335	1051				
300	12"	15	2	335	675	5823	323,9	100	6	964
		22,5	6	430	405	1282				
		30	10	510	347	616				
350	14"	15	1	335	739	7601	355,6	100	6	1155
		22,5	4	410	850	3840				
		30	7	480	638	1661				
400	16"	15	1	320	1545	25149	406,4	100	7	1486
		22,5	4	430	858	4157				
		30	6	490	702	2184				
450	18"	15	3	350	869	11727	457	100	8	1856
		22,5	6	430	579	3504				
		30	11	530	434	1316				
500	20"	15	2	330	1048	22570	508	100	8	2274
		22,5	3	390	749	7967				
		30	6	440	582	3981				

WELD END
PN16

Bellows Material
304ss-316ss 321ss

Flange Material
Carbon Steel

Design Pressure
6barg

Design Temperature
400°C

Flange drilling is per PN6
Movements are non-concurrent

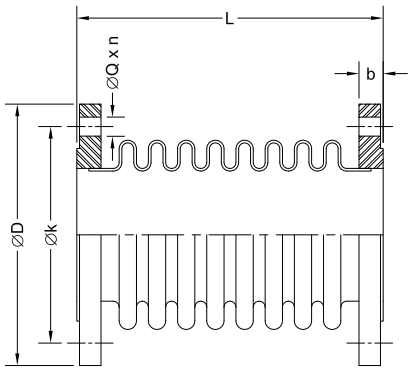

Nominal Diameter (DN)		Movements (mm) Axial (+/-)	Lateral (+/-)	Length (L) (mm)	Spring Rates (N/mm) Axial	Lateral	D (mm)	k (mm)	b (mm)	n	Q (mm)	Effective Area (cm2)
25	1"	15	6	120	62	31	100	75	14	4	11	18
32	1 1/4"	15	6	120	62	31	120	90	14	4	14	18
40	1 1/2"	15	7	125	54	31	130	100	14	4	14	23
50	2"	15	6	110	32	43	140	110	14	4	14	37
65	2 1/2"	15	6	120	34	60	160	130	14	4	14	58
		30	11	170	53	32						
80	3"	15	3	105	41	145	190	150	16	4	18	80
		30	12	205	66	37						
100	4"	15	3	115	71	301	210	170	16	4	18	129
		30	9	185	72	82						
125	5"	15	3	120	84	511	240	200	18	8	18	185
		30	8	200	78	121						
150	6"	15	2	120	105	814	265	225	18	8	18	268
		30	7	175	63	187						
200	8"	15	2	145	146	1279	320	280	20	8	18	451
		30	7	200	91	310						
250	10"	15	2	145	154	2049	375	335	22	12	18	682
		30	7	220	86	369						
300	12"	15	2	170	355	4380	440	395	22	12	22	945
		30	6	260	197	800						
		37,5	9	310	162	428						
350	14"	15	2	165	386	5669	490	445	22	12	22	1127
		30	6	260	214	1036						
		37,5	8	310	175	554						
400	16"	15	2	180	250	4046	540	495	22	16	22	1479
		30	5	230	178	1520						
		37,5	8	280	139	728						
450	18"	15	2	180	307	6177	595	550	24	16	22	1839
		30	4	230	219	2321						
		37,5	6	280	170	1111						
500	20"	15	2	180	279	6909	645	600	24	20	22	2264
		30	4	230	199	2596						
		37,5	6	280	155	1243						
600	24"	15	2	170	530	18745	755	705	24	20	26	3227
		30	4	240	331	5003						
		37,5	6	310	265	2379						
700	28"	15	2	190	419	14565	860	810	24	24	26	4372
		30	5	270	262	3797						
		37,5	5	310	262	3363						
800	32"	15	1	170	755	45102	975	920	24	24	30	5705
		30	3	230	503	14411						
		37,5	3	280	431	9278						
900	36"	15	1	190	1194	70128	1075	1020	26	24	30	7201
		30	3	255	796	22008						
		37,5	4	330	682	13061						
1000	40"	15	1	165	1037	70455	1175	1120	26	28	30	8885
		30	2	205	829	35891						
		37,5	4	330	592	13993						

FIXED FLANGED
PN6

Bellows Material
304ss - 316ss 321ss

Flange Material
Carbon Steel

Design Pressure
10barg

Design Temperature
400°C

Flange drilling is per PN10
Movements are non-concurrent

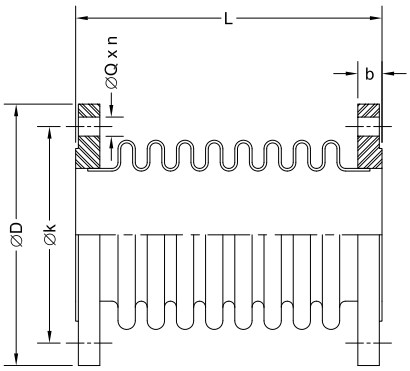

FIXED FLANGED PN10

Nominal Diameter (DN)		Movements (mm) Axial (+/-)	Lateral (+/-)	Length (L) (mm)	Spring Rates (N/mm) Axial	Lateral	D (mm)	k (mm)	b (mm)	n	Q (mm)	Effective Area (cm2)
25	1"	15	6	125	62	31	115	85	16	4	14	18
32	1 1/4"	15	6	125	62	31	140	100	16	4	18	18
40	1 1/2"	15	7	155	93	30	150	110	16	4	18	23
50	2"	15	5	130	62	57	165	125	18	4	18	38
65	2 1/2"	15	4	130	68	95	185	145	18	4	18	58
		22,5	6	160	98	77						
		30	10	185	105	56						
80	3"	15	4	130	66	124	200	160	20	8	18	80
		22,5	6	165	90	95						
		30	10	185	90	70						
100	4"	15	3	135	113	333	220	180	20	8	18	129
		22,5	5	165	88	159						
		30	7	205	109	118						
125	5"	15	2	140	134	641	250	210	22	8	18	187
		22,5	4	170	104	274						
		30	7	210	107	169						
150	6"	15	3	145	152	936	285	240	22	8	22	268
		22,5	4	170	118	448						
		30	6	210	127	245						
200	8"	15	3	175	211	1422	340	295	24	8	22	460
		22,5	5	210	158	584						
		30	7	230	140	385						
250	10"	15	2	180	292	2687	395	350	26	12	22	683
		22,5	5	235	195	888						
		30	7	275	159	499						
300	12"	15	2	165	355	4380	445	400	26	12	22	945
		22,5	3	205	254	1567						
		30	6	245	197	840						
350	14"	15	2	170	582	8653	505	460	26	16	22	1141
		22,5	4	215	364	2417						
		30	5	255	323	1509						
400	16"	15	2	170	474	7707	565	515	26	16	26	1483
		22,5	3	210	339	3242						
		30	5	255	296	1867						
450	18"	15	1	185	587	11842	615	565	28	20	26	1841
		22,5	3	230	714	7176						
		30	4	270	555	3626						
500	20"	15	2	195	758	14195	670	620	28	20	26	2268
		22,5	3	235	649	8039						
		30	4	285	505	3733						

Bellows Material
304ss-316ss 321ss

Flange Material
Carbon Steel

Design Pressure
16barg

Design Temperature
400°C

Flange drilling is per PN16
Movements are non-concurrent

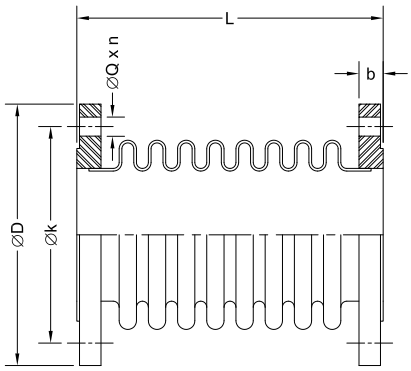

Nominal Diameter (DN)		Movements (mm) Axial (+/-)	Movements (mm) Lateral (+/-)	Length (L) (mm)	Spring Rates (N/mm) Axial	Spring Rates (N/mm) Lateral	D (mm)	k (mm)	b (mm)	n	Q (mm)	Effective Area (cm2)
50	2"	15	4	120	117	109	165	125	18	4	18	38
		22,5	4	150	126	64						
65	2 1/2"	15	3	120	128	179	185	145	18	4	18	58
		22,5	7	150	124	97						
		30	8	180	182	99						
80	3"	15	3	120	124	231	200	160	20	8	18	80
		22,5	7	150	123	129						
		30	9	180	166	121						
100	4"	15	3	120	145	484	220	180	20	8	18	129
		22,5	4	150	146	266						
		30	8	185	161	173						
125	5"	15	3	125	168	808	250	210	22	8	18	186
		22,5	5	155	126	333						
		30	7	190	171	267						
150	6"	15	2	130	350	2166	285	240	22	8	22	268
		22,5	4	155	171	648						
		30	7	200	191	379						
200	8"	15	2	150	513	3132	340	295	24	12	22	456
		22,5	4	190	338	1242						
		30	5	230	300	817						
250	10"	15	2	165	559	5149	405	355	26	12	26	684
		22,5	4	205	372	1517						
		30	5	245	335	1051						
300	12"	15	2	200	675	5823	460	410	28	12	26	964
		22,5	6	300	405	1282						
		30	10	380	347	616						
350	14"	15	1	210	739	7601	520	470	30	16	26	1155
		22,5	4	290	850	3840						
		30	7	370	638	1661						
400	16"	15	1	210	1545	25149	580	525	32	16	30	1486
		22,5	4	310	858	4157						
		30	6	365	702	2184						
450	18"	15	3	240	869	11727	640	585	32	20	30	1856
		22,5	6	320	579	3504						
		30	11	405	434	1316						
500	20"	15	2	215	1048	22570	715	650	34	20	33	2274
		22,5	3	270	749	7967						
		30	6	330	582	3981						

FIXED FLANGED
PN16

Bellows Material
304ss - 316ss 321ss

Flange Material
Carbon Steel

Design Pressure
6barg

Design Temperature
400°C

Flange drilling is per PN6
Movements are non-concurrent

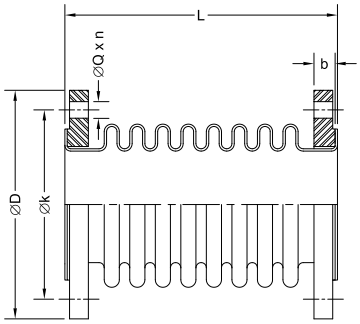

FLOATING FLANGED PN6

Nominal Diameter (DN)		Movements (mm) Axial (+/-)	Lateral (+/-)	Length (L) (mm)	Spring Rates (N/mm) Axial	Lateral	D (mm)	k (mm)	b (mm)	n	Q (mm)	Effective Area (cm2)
25	1"	15	6	120	62	31	100	75	14	4	11	18
32	1 1/4"	15	6	120	62	31	120	90	14	4	14	18
40	1 1/2"	15	7	125	54	31	130	100	14	4	14	23
50	2"	15	6	110	32	43	140	110	14	4	14	37
65	2 1/2"	15	6	120	34	60	160	130	14	4	14	58
		30	11	170	53	32						
80	3"	15	3	105	41	145	190	150	16	4	18	80
		30	12	205	66	37						
100	4"	15	3	115	71	301	210	170	16	4	18	129
		30	9	185	72	82						
125	5"	15	3	120	84	511	240	200	18	8	18	185
		30	8	200	78	121						
150	6"	15	2	120	105	814	265	225	18	8	18	268
		30	7	175	63	187						
200	8"	15	2	145	146	1279	320	280	20	8	18	451
		30	7	200	91	310						
250	10"	15	2	145	154	2049	375	335	22	12	18	682
		30	7	220	86	369						
300	12"	15	2	170	355	4380	440	395	22	12	22	945
		30	6	260	197	800						
		37,5	9	310	162	428						
350	14"	15	2	165	386	5669	490	445	22	12	22	1127
		30	6	260	214	1036						
		37,5	8	310	175	554						
400	16"	15	2	180	250	4046	540	495	22	16	22	1479
		30	5	230	178	1520						
		37,5	8	280	139	728						
450	18"	15	2	180	307	6177	595	550	24	16	22	1839
		30	4	230	219	2321						
		37,5	6	280	170	1111						
500	20"	15	2	180	279	6909	645	600	24	20	22	2264
		30	4	230	199	2596						
		37,5	6	280	155	1243						
600	24"	15	2	170	530	18745	755	705	24	20	26	3227
		30	4	240	331	5003						
		37,5	6	310	265	2379						
700	28"	15	2	190	419	14565	860	810	24	24	26	4372
		30	5	270	262	3797						
		37,5	5	310	262	3363						
800	32"	15	1	170	755	45102	975	920	24	24	30	5705
		30	3	230	503	14411						
		37,5	3	280	431	9278						
900	36"	15	1	190	1194	70128	1075	1020	26	24	30	7201
		30	3	255	796	22008						
		37,5	4	330	682	13061						
1000	40"	15	1	165	1037	70455	1175	1120	26	28	30	8885
		30	2	235	829	35891						
		37,5	4	330	592	13993						

Bellows Material
304ss-316ss 321ss

Flange Material
Carbon Steel

Design Pressure
10 barg

Design Temperature
400 °C

Flange drilling is per PN10
Movements are non-concurrent

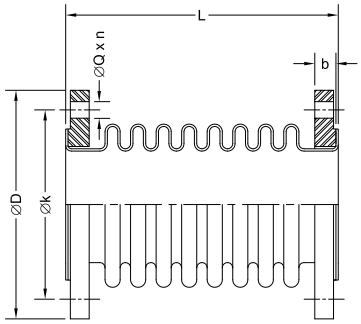

Nominal Diameter (DN)		Movements (mm) Axial (+/-)	Lateral (+/-)	Length (L) (mm)	Spring Rates (N/mm) Axial	Lateral	D (mm)	k (mm)	b (mm)	n	Q (mm)	Effective Area (cm2)
25	1"	15	6	125	62	31	115	85	16	4	14	18
32	1 1/4"	15	6	125	62	31	140	100	18	4	18	18
40	1 1/2"	15	7	155	93	30	150	110	18	4	18	23
50	2"	15	5	130	62	57	165	125	20	4	18	38
65	2 1/2"	15	4	130	68	95	185	145	20	8	18	58
		22,5	6	160	98	77						
		30	10	185	105	56						
80	3"	15	4	130	66	124	200	160	20	8	18	80
		22,5	6	165	90	95						
		30	10	185	90	70						
100	4"	15	3	135	113	333	220	180	22	8	18	129
		22,5	5	165	88	159						
		30	7	205	109	118						
125	5"	15	2	140	134	641	250	210	22	8	18	187
		22,5	4	170	104	274						
		30	7	210	107	169						
150	6"	15	3	145	152	936	285	240	24	8	22	268
		22,5	4	170	118	448						
		30	6	210	127	245						
200	8"	15	3	175	211	1422	340	295	24	8	22	460
		22,5	5	210	158	584						
		30	7	230	140	385						
250	10"	15	2	180	292	2687	395	350	26	12	22	683
		22,5	5	235	195	888						
		30	7	275	159	499						
300	12"	15	2	165	355	4380	445	400	26	12	22	945
		22,5	3	205	254	1567						
		30	6	245	197	840						
350	14"	15	2	170	582	8653	505	460	26	16	22	1141
		22,5	4	215	364	2417						
		30	5	255	323	1509						
400	16"	15	2	170	474	7707	565	515	26	16	26	1483
		22,5	3	210	339	3242						
		30	5	255	296	1867						
450	18"	15	1	185	587	11842	615	565	28	20	26	1841
		22,5	3	230	714	7176						
		30	4	270	555	3626						
500	20"	15	2	195	758	14195	670	620	28	20	26	2268
		22,5	3	235	649	8039						
		30	4	285	505	3733						

FLOATING FLANGED
PN10

Bellows Material
304ss - 316ss 321ss

Flange Material
Carbon Steel

Design Pressure
16barg

Design Temperature
400°C

Flange drilling is per PN16
Movements are non-concurrent

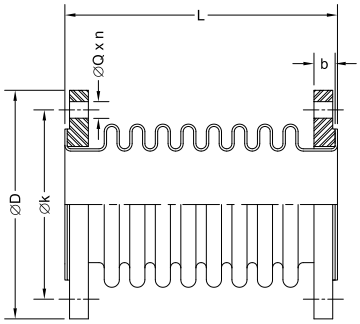

FLOATING FLANGED PN16

Nominal Diameter (DN)		Movements (mm) Axial (+/-)	Movements (mm) Lateral (+/-)	Length (L) (mm)	Spring Rates (N/mm) Axial	Spring Rates (N/mm) Lateral	D (mm)	k (mm)	b (mm)	n	Q (mm)	Effective Area (cm2)
50	2"	15	4	120	117	109	165	125	18	4	4	38
		22,5	4	150	126	64						
65	2 1/2"	15	3	120	128	179	185	145	18	4	4	58
		22,5	7	150	124	97						
		30	8	180	182	99						
80	3"	15	3	120	124	231	200	160	20	8	8	80
		22,5	7	150	123	129						
		30	9	180	166	121						
100	4"	15	3	120	145	484	220	180	20	8	8	129
		22,5	4	150	146	266						
		30	8	185	161	173						
125	5"	15	3	125	168	808	250	210	22	8	8	186
		22,5	5	155	126	333						
		30	7	190	171	267						
150	6"	15	2	130	350	2166	285	240	22	8	8	268
		22,5	4	155	171	648						
		30	7	200	191	379						
200	8"	15	2	150	513	3132	340	295	24	12	12	456
		22,5	4	190	338	1242						
		30	5	230	300	817						
250	10"	15	2	165	559	5149	405	355	26	12	12	684
		22,5	4	205	372	1517						
		30	5	245	335	1051						
300	12"	15	2	200	675	5823	460	410	28	12	12	964
		22,5	6	300	405	1282						
		30	10	380	347	616						
350	14"	15	1	210	739	7601	520	470	30	16	16	1155
		22,5	4	290	850	3840						
		30	7	370	638	1661						
400	16"	15	1	210	1545	25149	580	525	32	16	16	1486
		22,5	4	310	858	4157						
		30	6	365	702	2184						
450	18"	15	3	240	869	11727	640	585	32	20	20	1856
		22,5	6	320	579	3504						
		30	11	405	434	1316						
500	20"	15	2	215	1048	22570	715	650	34	20	20	2274
		22,5	3	270	749	7967						
		30	6	330	582	3981						

Flexible Element Material
EPDM/NBR

Design Pressure
16 barg

Flange Material
Galvanized Carbon Steel

Temperature
110 °C

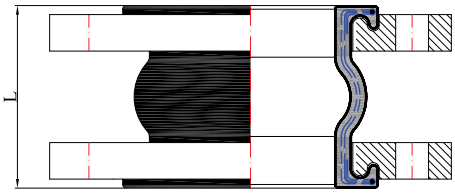

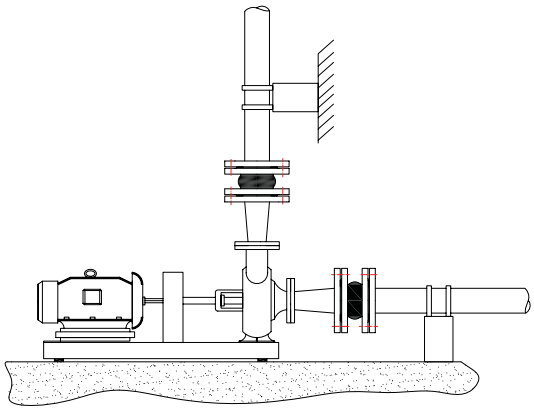

Nominal Diameter (DN)		Length (L) (mm)	Alternative Length (L) (mm)
25	1"	100	130
32	1 1/4"	100	130
40	1 1/2"	100	130
50	2"	100	130
65	2 1/2"	100	130
80	3"	100	130
100	4"	100	130
125	5"	120	130
150	6"	120	130
200	8"	120	130
250	10"	130	130
300	12"	210	130
350	14"	210	
400	16"	220	
450	18"	220	
500	20"	270	
600	24"	300	
700	28"	300	

* Best solution to vibration, noise and misalignment problems.
* Up to 16 bar pressure and 110°C temperature working conditions
* Rubber body with Nylon-Cord carcassed.
* Flanged construction with integral self - sealing profile.
* Flanges are electro galvanized carbon steel material
* Other lengths may be available upon request.

Flanges with limit rod connections or limit rod kits are available

RUBBER

Bellows Material	Design Pressure	Design Temperature
304ss-316ss 321ss	16barg	400°C

Balance Material	Design Movement
Carbon Steel 304ss -316ss	(±)25 mm axial

Nominal Diameter (DN)	DN15 (1/2")	DN20 (3/4")	DN25 (1")	DN32 (1 1/4")	DN40 (1 1/2")	DN50 (2")	DN65 (2 1/2")	DN80 (3")	DN100 (4")
Outside Diameter D (mm)	35	42	51	60	63	70	99	114	139
Length L (mm)	260	260	260	260	260	260	260	260	260

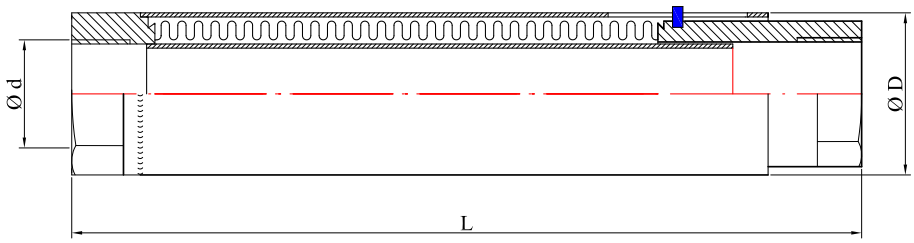

CENTRAL HEATING SYSTEM
EXPANSION JOINTS

Advantages of using expansion joints in central heating systems:

- Deformations and noise resulting from thermal stresses are prevented
- Minimum and maximum limits and pretension are observed easily with the help of limiting pin
- Internal sleeve prevents pressure losses and misalignments while external cover prevents external damages
- Installation is easy and quick

- Connection type is threaded inside for diameters up to and including DN50 (2”)
- Significant displacements due to thermal movements on central heating pipes create thermal stresses resulting in bending of pipes and irritating noise

Bellows Material
304ss-316ss 321ss

Balance of Materials
Carbon Steel

Design Temperature
400°C

Weld end connections are available upon request

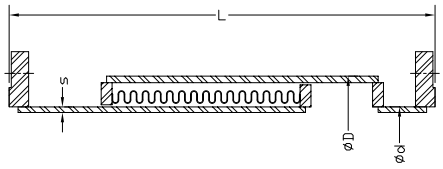

Nominal Diameter (DN)		Design Pressure (barg)	Length (L) (mm) Axial (+/-) (mm) 30	60	90	120	d (mm)	s (mm)	D (mm)	Effective Area (cm2)
25	1"	40	275	395	520	-	33,7	2,6	88,9	54
32	1 1/4"		285	405	530	-	42,4	3,2	88,9	54
40	1 1/2"		295	415	535	-	48,3	3,2	88,9	54
50	2"		300	420	555	710	60,3	3,6	114,3	89
65	2 1/2"		315	430	560	715	76,1	3,6	114,3	91
80	3"	25	315	435	585	725	88,9	4,0	139,7	141
100	4"		320	450	585	750	114,3	4,5	165,0	196
125	5"		335	465	595	765	139,7	5,0	193,7	272
150	6"		345	475	615	790	165,0	5,0	219,1	346
200	8"		395	520	685	860	219,1	4,5	323,9	572
250	10"		420	585	760	950	273,0	5,6	355,6	829

Externally pressurized expansion joints are used if there would be large axial movements.

This type of expansion joint pressurizes the bellows externally, eliminating column instability concerns for the bellows.

This configuration provides an outside cover protecting bellows from external elements and inside pipe acts as a liner protecting bellows from flow medium and and streamlines the flow.

EXTERNALLY PRESSURIZED

Bellows Material
304ss - 316ss 321ss

Balance of Materials
Carbon Steel

Design Pressure
16barg

Design Temperature
400°C

Movements are non-concurrent

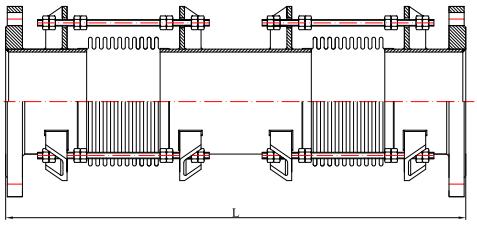

SEISMIC LIMIT ROD

Nominal Diameter (DN)		Type 1 Movements (mm) Axial (+/-)	Type 1 Movements (mm) Lateral (+/-)	Type 1 Length (L) (mm)	Type 2 Movements (mm) Axial (+/-)	Type 2 Movements (mm) Lateral (+/-)	Type 2 Length (L) (mm)	Type 3 Movements (mm) Axial (+/-)	Type 3 Movements (mm) Lateral (+/-)	Type 3 Length (L) (mm)
32	1 1/4"	15	25	595	15	50	620	15	75	690
40	1 1/2"	15	25	620	15	50	650	15	75	720
50	2"	15	25	580	15	50	615	15	75	690
65	2 1/2"	15	25	620	15	50	660	15	75	735
		23	25	665	23	50	705	23	75	780
		30	25	710	30	50	750	30	75	825
80	3"	15	25	700	15	50	730	15	75	790
		23	25	750	23	50	780	23	75	835
		30	25	795	30	50	830	30	75	885
100	4"	15	25	750	15	50	790	15	75	825
		23	25	805	23	50	840	23	75	860
		30	25	860	30	50	895	30	75	915
125	5"	15	25	765	15	50	810	15	75	865
		23	25	810	23	50	875	23	75	910
		30	25	875	30	50	920	30	75	950
150	6"	15	25	840	15	50	890	15	75	945
		23	25	890	23	50	940	23	75	995
		30	25	940	30	50	985	30	75	1040
200	8"	15	25	885	15	50	960	15	75	1050
		23	25	935	23	50	1015	23	75	1100
		30	25	990	30	50	1065	30	75	1150
250	10"	15	25	885	15	50	930	15	75	1040
		23	25	930	23	50	985	23	75	1095
		30	25	985	30	50	1040	30	75	1150

Bellows Material
304ss-316ss 321ss

Balance of Materials
Carbon Steel

Design Pressure
16barg

Design Temperature
400°C

Movements are non-concurrent

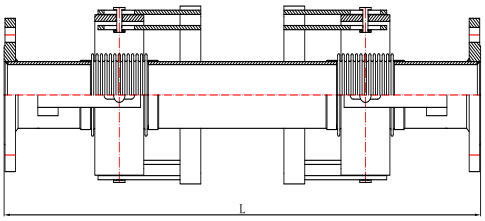

Nominal Diameter (DN)		Type 1 Movements (mm) Axial x (+/-)	Type 1 Movements (mm) Lateral y (+/-)	Type 1 Movements (mm) Lateral z (+/-)	Type 1 Length (L) (mm)	Type 2 Movements (mm) Axial x (+/-)	Type 2 Movements (mm) Lateral y (+/-)	Type 2 Movements (mm) Lateral z (+/-)	Type 2 Length (L) (mm)
32	1 1/4"	50	100	100	750	50	200	200	750
40	1 1/2"	50	100	100	790	50	200	200	790
50	2"	50	100	100	790	50	200	200	790
65	2 1/2"	50	100	100	940	50	200	200	940
80	3"	50	100	100	940	50	200	200	940
100	4"	50	100	100	940	50	200	200	990
125	5"	50	100	100	940	50	200	200	1090
150	6"	50	100	100	1100	50	200	200	1200
200	8"	50	100	100	1130	50	200	200	1330
250	10"	50	100	100	1130	50	200	200	1430

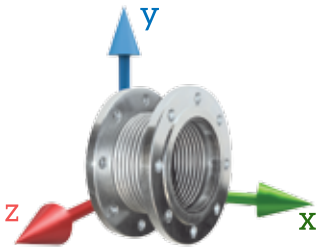

In addition to thermal movements in pipe lines, there are mechanical movements due to earthquakes, ground settlements and landslides. These type of movements can cause significiant damage to the piping systems in dilatation points of buildings, pipe junctions between vessels and boilers.

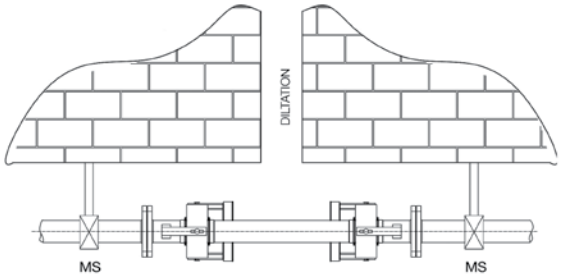

These mechanical movements can be absorbed by using seismic expansion joints.

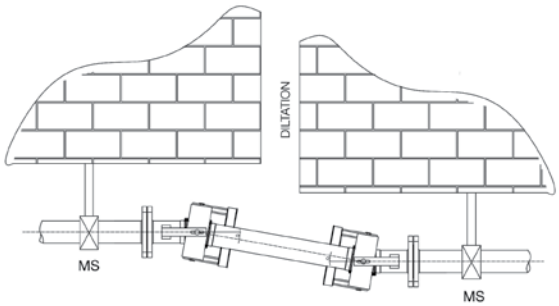

MS : Main Support

SEISMIC GIMBALS

Bellows Material-Multi ply
304ss - 316ss 321ss

Flange Materials
Carbon Steel Stainless Steel

Design Pressure
16barg

Design Temperature
400°C

Movements are small vibrational movements
Flange drilling is per PN16

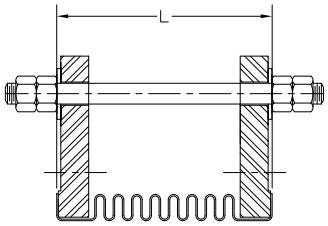

Nominal Diameter (DN)		Length (L) (mm)	Effective Area (cm2)	D (mm)	k (mm)	b (mm)	n	Q (mm)
50	2"	120	38	165	125	18	4	18
65	2 1/2"	120	58	185	145	18	4	18
80	3"	120	80	200	160	20	8	18
100	4"	120	129	220	180	20	8	18
125	5"	125	186	250	210	22	8	18
150	6"	130	268	285	240	22	8	22
200	8"	150	456	340	295	24	12	22
250	10"	165	684	405	355	26	12	26
300	12"	165	964	460	410	28	12	26

Vibration absorbing expansion joints are manufactured from multi-ply to absorb and dampen vibrations. They are ideal for pump connections, exhaust engine lines, in applications where system temperature is too high for rubber expansion joints.

VIBRATION ABSORBERS

Flexible Hoses Materials
316L / 321

Braid Material
304ss

Fitting Types
Union, nipple, weld-ended, flanged

Fitting Materials
Carbon Steel 304ss / 316ss

Braided flexible connectors are used for steam, water, gas and oil line applications to provide flexibility.

From 2 ½" diameter weld-ended and flanged connections are used.

Fittings are attached by TIG welding process.

For addional information and specific requests please consult with our Project and Design Office.

Design Pressure
10barg

Design Temperature
450°C

Flexible Hose Material
304Lss

Fitting Connection
TIG- Argon welding

Fittings material (nippels/unions)
Carbon Steel (Cr-Ni coated)

Insulation Material
Polyethylene closed cell foam (At 0°C λ=0,035 W/mK/Class 0)

Fan-coil connectors are used for flexible connections of fan-coil units to the heating / cooling system distribution piping.

Fittings Diameter	Hose Diameter	Insulation Diameter	InsulationTickness
½"-½"	12 mm	18 mm	6 mm
½"-¾"	12 mm	18 mm	6 mm
½"-¾"	16 mm	18 mm	6 mm
¾"-¾"	16 mm	22 mm	6 mm
¾"-1"	16 mm	22 mm	6 mm
1"-1"	20 mm	28 mm	6 mm

All hoses are tested for tightness, testing is done with nitrogen gas.

For special diameters, lengths and fitting types, please consult with our Technical Services

BRAIDED/FAN-COIL
FLEXIBLE METAL HOSE CONNECTORS

Lens

Expansion Joints

Lens bellows can be the right solution to piping, ducting and vessel thermal growth problems compared to conventional thin walled metal bellows.

Advantages of lens bellows

Dents and gouges create stress risers in thin ply bellows which result in fatigue cracks over time. Lens bellows have the advantage of holding up to mechanical damage better than thin wall bellows.

Thicker wall of lens bellows holds up better to corrosion attacks

Weld repair can be performed by plant maintenance staff on thick walled bellows.

Drain couplings can be added to the bottom of the convolution to prevent condensate build up

Common use of carbon steel material

Thick walled, high convolution is durable and lasts for a long time.

Dents and gouges create stress risers in thin ply bellows which result in fatigue cracks over time. Lens bellows have the advantage of holding up to mechanical damage better than thin wall bellows.

Thick walled, high convolution is durable and lasts for a long time.

Sizes from DN-300 up to DN-7000.

Single layer in thick material.

Limitless convolution height.

One or more convolutions.

Supplied with flanged or welded ends or bellows element only

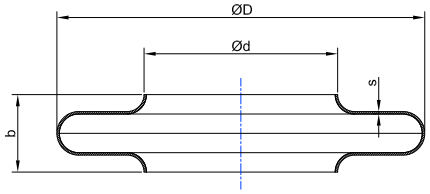

Nominal Diameter (DN)		d (mm)	D (mm)	b (mm)	Thickness (s) (mm)
300	12"	306	550	120-160	2-4
400	16"	408	700	120-160	2-4
500	20"	508	800	120-160	2-4
600	24"	610	900	120-160	2-4
700	28"	711	1000	120-160	2-4
800	32"	813	1100	120-160	2-4
900	36"	914	1200	120-160	2-4
1000	40"	1016	1300	120-160	2-4
1100	44"	1120	1480	160	2-4
1200	48"	1220	1580	160	2-4
1300	52"	1320	1680	160	2-4
1400	56"	1420	1780	160	2-4
1500	60"	1520	1880	160	2-4
1600	64"	1620	2020	160	2-4
1700	68"	1720	2120	160	2-4
1800	72"	1820	2220	160	2-4
1900	76"	1920	2320	160	2-4
2000	80"	2020	2500	160	2-6
2100	84"	2120	2600	160	2-6
2200	88"	2220	2700	160	2-6
2300	92"	2320	2800	160	2-6
2400	96"	2420	2900	160	2-6
2500	100"	2520	3000	160	2-6
2600	104"	2620	3100	160	2-6
2700	108"	2720	3200	160	2-6
2800	112"	2820	3300	160	2-6
2900	116"	2920	3400	160	2-6
3000	120"	3020	3500	160	2-6

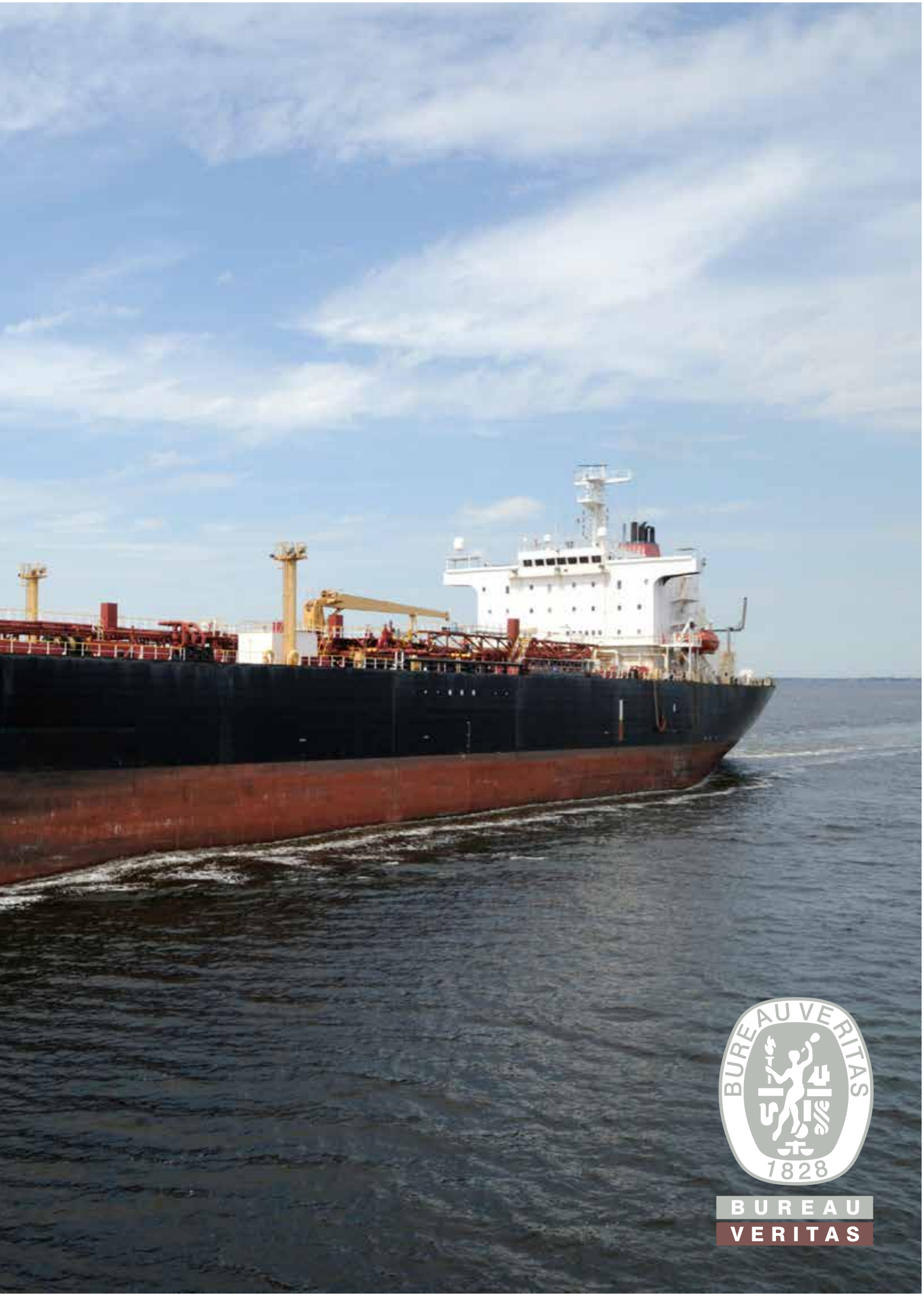
BUREAU VERITAS
1828
BUREAU
VERITAS

Bellows Material	Design Pressure	Design Temperature
321ss	**2.5barg**	**550°C**

Weld end Material	Design No
Carbon Steel	**PT-001-BAL.0**

Expansion joints DN450 through DN1000 have 1mm thick liners

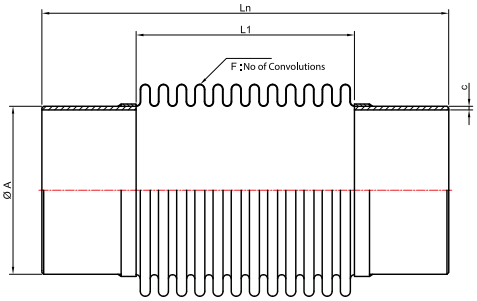

Nominal Diameter (DN)		Length (Ln) (mm)	Bellows					Pipe	
			Number of Convolutions	Number of Plies	Ply Thickness (mm)	L1 (mm)	OD (mm)	A (mm)	c (mm)
32	1 1/4"	205	26	1	0,3	105	52	42,4	2,6
40	1 1/2"	205	22	1	0,3	105	60	48,3	2,6
50	2"	245	13	2	0,3	120	78	60,3	2,9
65	2 1/2"	245	13	2	0,3	120	96	76,1	2,9
80	3"	245	13	2	0,3	120	110	88,9	3,2
90	3.5"	245	13	2	0,3	120	122	101,6	3,2
100	4"	245	11	2	0,3	120	140	114,3	3,6
125	5"	245	11	2	0,3	120	166	139,7	3,6
150	6"	245	9	2	0,3	120	200	168,3	4,0
175	7"	245	9	2	0,3	120	226	193,7	4,5
200	8"	245	9	2	0,3	120	251	219,1	4,5
250	10"	245	9	2	0,3	120	305	273	5,0
300	12"	295	9	2	0,3	145	361	323,9	5,6
350	14"	295	9	2	0,3	145	393	355,6	5,6
400	16"	295	9	2	0,3	145	443	406,4	5,6
450	18"	300	8	2	0,4	176	509	457	8,0
500	20"	340	9	2	0,4	216	564	508	8,0
600	24"	340	9	2	0,4	216	669	609	10,0
700	28"	380	6	2	0,4	168	779	711	10,0
800	32"	380	6	2	0,4	180	888	812	10,0
900	36"	380	5	2	0,5	170	998	914	10,0
1000	40"	380	5	2	0,5	190	1108	1016	10,0

Bellows Material	Design Pressure	Design Temperature
321ss	2.5barg	550°C

Flange Material
Carbon Steel

Design No
PT-007-BALF.0

Expansion joints DN450 through DN1000 have 1mm thick liners

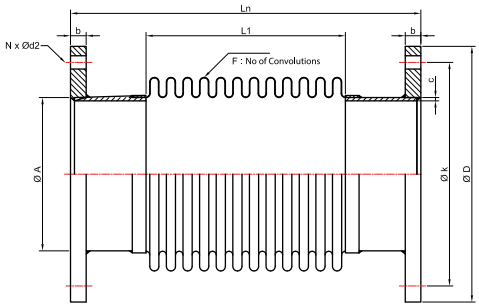

Nominal Diameter (DN)		Length (Ln) (mm)	Bellows Number of Convolutions	Number of Plies	Ply Thickness (mm)	L1 (mm)	OD (mm)	Pipe A (mm)	c (mm)	Flange D (mm)	b (mm)	k (mm)	N x d2
32	1 1/4"	205	26	1	0,3	105	52	42,4	2,6	140	16	100	4 x 18
40	1 1/2"	205	22	1	0,3	105	60	48,3	2,6	150	16	110	4 x 18
50	2"	245	13	2	0,3	120	78	60,3	2,9	165	16	125	4 x 18
65	2 1/2"	245	13	2	0,3	120	96	76,1	2,9	185	16	145	4 x 18
80	3"	245	13	2	0,3	120	110	88,9	3,2	200	16	160	8 x 18
90	3.5"	245	13	2	0,3	120	122	101,6	3,2	220	16	180	8 x 18
100	4"	245	11	2	0,3	120	140	114,3	3,6	220	16	180	8 x 18
125	5"	245	11	2	0,3	120	166	139,7	3,6	250	16	210	8 x 18
150	6"	245	9	2	0,3	120	200	168,3	4,0	285	16	240	8 x 22
175	7"	245	9	2	0,3	120	226	193,7	4,5	315	16	270	8 x 22
200	8"	245	9	2	0,3	120	251	219,1	4,5	320	16	280	8 x 18
250	10"	245	9	2	0,3	120	305	273	5,0	375	16	335	12 x 18
300	12"	295	9	2	0,3	145	361	323,9	5,6	440	16	395	12 x 22
350	14"	295	9	2	0,3	145	393	355,6	5,6	490	16	445	12 x 22
400	16"	295	9	2	0,3	145	443	406,4	5,6	540	16	495	16 x 22
450	18"	300	8	2	0,4	176	509	457	8,0	595	16	550	16 x 22
500	20"	340	9	2	0,4	216	564	508	8,0	645	16	600	20 x 22
600	24"	340	9	2	0,4	216	669	609	10,0	754	20	700	20 x 22
700	28"	380	6	2	0,4	168	779	711	10,0	856	20	800	24 x 22
800	32"	380	6	2	0,4	180	888	812	10,0	958	20	900	24 x 22
900	36"	380	5	2	0,5	170	998	914	10,0	1060	20	1010	28 x 22
1000	40"	380	5	2	0,5	190	1108	1016	10,0	1162	20	1110	32 x 22

Bellows Material	Design Pressure	Design Temperature
321ss	2.5barg	550°C
Weld end Material: Carbon Steel	Design No: PT-002-BAL2.0	

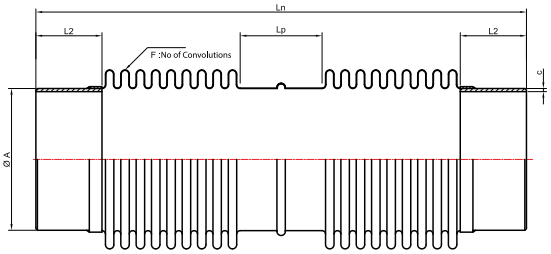

Nominal Diameter (DN)		Length (Ln) (mm)	Bellows				Pipe			
			Number of Convolutions	Number of Plies	Ply Thickness (mm)	OD (mm)	A (mm)	c (mm)	L2 (mm)	Lp (mm)
40	1 1/2"	375	20 x 2	1	0,3	61	48,3	2,6	40	101
50	2"	375	17 x 2	2	0,3	77	60,3	2,9	40	100
65	2 1/2"	345	11 x 2	2	0,3	95	76,1	3,2	40	111
80	3"	380	13 x 2	2	0,3	111	88,9	3,2	40	115
100	4"	330	9 x 2	2	0,3	140	114,3	3,6	40	113
125	5"	320	9 x 2	2	0,3	168	139,7	3,6	40	100
150	6"	395	10 x 2	2	0,3	200	168,3	4,0	50	107
175	7"	395	10 x 2	2	0,3	228	193,7	4,5	50	107
200	8"	405	8 x 2	2	0,3	255	219,1	4,5	50	116
250	10"	405	7 x 2	2	0,3	315	273	5,0	50	116
300	12"	415	6 x 2	2	0,3	372	323,9	6,0	70	88
350	14"	415	6 x 2	2	0,3	406	355,6	6,0	70	88
400	16"	485	6 x 2	2	0,3	459	406,4	6,0	70	115
450	18"	490	5 x 2	2	0,4	511	457	6,0	70	120
500	20"	460	5 x 2	2	0,4	564	508	6,0	70	115

BLNC II

Bellows Material	Design Pressure	Design Temperature
321ss	2.5barg	550°C
Flange Material: Carbon Steel	Design No: PT-008-BAL2F.0	

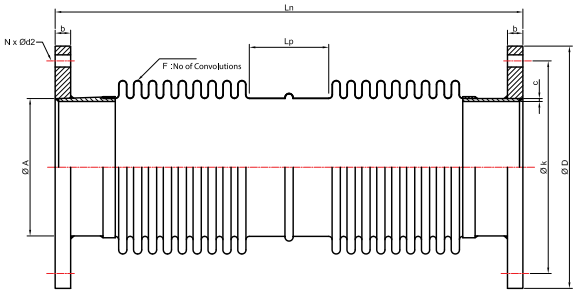

Nominal Diameter (DN)		Length (Ln) (mm)	Bellows: Number of Convolutions	Bellows: Number of Plies	Bellows: Ply Thickness (mm)	Bellows: OD (mm)	Pipe: A (mm)	Pipe: c (mm)	Pipe: Lp (mm)	Flange: D (mm)	Flange: b (mm)	Flange: k (mm)	Flange: N x d2
40	1 1/2"	375	20 x 2	1	0,3	60,5	48,3	2,6	101	150	16	110	4 x 18
50	2"	375	17 x 2	2	0,3	77	60,3	2,9	100	165	16	125	4 x 18
65	2 1/2"	345	11 x 2	2	0,3	95	76,1	3,2	111	185	16	145	4 x 18
80	3"	380	13 x 2	2	0,3	111	88,9	3,2	115	200	16	160	8 x 18
100	4"	330	9 x 2	2	0,3	140	114,3	3,6	113	220	16	180	8 x 18
125	5"	320	9 x 2	2	0,3	168	139,7	3,6	100	250	16	210	8 x 18
150	6"	395	10 x 2	2	0,3	200	168,3	4,0	107	285	16	240	8 x 22
175	7"	395	10 x 2	2	0,3	228	193,7	4,5	107	315	16	270	8 x 22
200	8"	405	8 x 2	2	0,3	255	219,1	4,5	116	320	16	280	8 x 18
250	10"	405	7 x 2	2	0,3	315	273	5,0	116	375	16	335	12 x 18
300	12"	415	6 x 2	2	0,3	372	323,9	6,0	88	440	16	395	12 x 22
350	14"	415	6 x 2	2	0,3	406	355,6	6,0	88	490	16	445	12 x 22
400	16"	485	6 x 2	2	0,3	458,5	406,4	6,0	115	540	16	495	16 x 22
450	18"	490	5 x 2	2	0,4	511	457	6,0	120	595	16	550	16 x 22
500	20"	460	5 x 2	2	0,4	564	508	6,0	115	645	16	600	20 x 22

Bellows Material	Design Pressure	Design Temperature
321ss	2.5barg	550°C
Weld end Material: Carbon Steel	Design No: PT-003-BAL3.0	

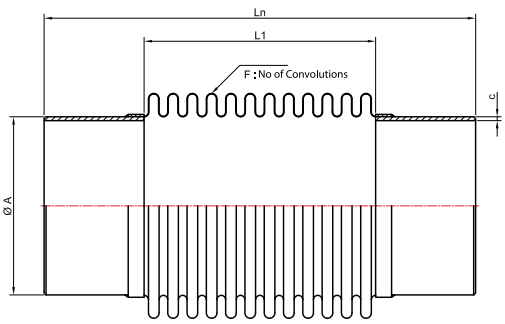

Nominal Diameter (DN)		Length (Ln) (mm)	Bellows					Pipe	
			Number of Convolutions	Number of Plies	Ply Thickness (mm)	L1 (mm)	OD (mm)	A (mm)	c (mm)
100	4"	285	15	2	0,3	165	140	114,3	3,6
125	5"	295	15	2	0,3	165	166	139,7	3,6
150	6"	295	13	2	0,3	175	200	168,3	4,0
200	8"	315	13	2	0,3	175	251	219,1	4,5
250	10"	315	13	2	0,3	175	305	273	5,0
300	12"	345	13	2	0,3	210	361	323,9	5,6
350	14"	345	13	2	0,3	210	393	355,6	5,6

Bellows Material

321ss

Flange Material

Carbon Steel

Design Pressure

2.5barg

Design Temperature

550°C

Design No

PT-009-BAL3F.0

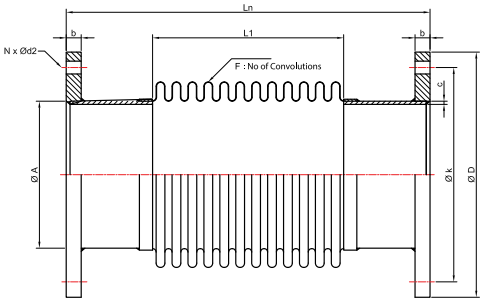

Nominal Diameter (DN)		Length (Ln) (mm)	Bellows Number of Convolutions	Number of Plies	Ply Thickness (mm)	L1 (mm)	OD (mm)	Pipe A (mm)	c (mm)	Flange D (mm)	b (mm)	k (mm)	N x d2
100	4"	285	15	2	0,3	165	140	114,3	3,6	220	16	180	8 x 18
125	5"	295	15	2	0,3	165	166	139,7	3,6	250	16	210	8 x 18
150	6"	295	13	2	0,3	175	200	168,3	4,0	285	16	240	8 x 22
200	8"	315	13	2	0,3	175	251	219,1	4,5	320	16	280	8 x 18
250	10"	315	13	2	0,3	175	305	273	5,0	375	16	335	12 x 18
300	12"	345	13	2	0,3	210	361	323,9	5,6	440	16	395	12 x 22
350	14"	345	13	2	0,3	210	393	355,6	5,6	490	16	445	12 x 22

Bellows Material	Design Pressure	Design Temperature
321ss	2.5barg	550°C
Weld end Material: Carbon Steel	Design No: PT-004-BAL4.0	

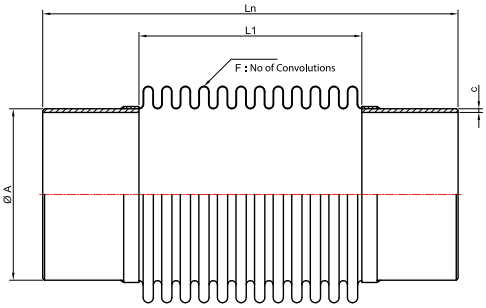

Nominal Diameter (DN)		Length (Ln) (mm)	Bellows					Pipe	
			Number of Convolutions	Number of Plies	Ply Thickness (mm)	L1 (mm)	OD (mm)	A (mm)	c (mm)
40	1 1/2"	150	18	1	0,3	90	60	48,3	2,6
50	2"	150	10	2	0,3	90	78	60,3	2,9
65	2 1/2"	150	10	2	0,3	90	96	76,1	2,9
80	3"	150	10	2	0,3	90	110	88,9	3,2
100	4"	150	7	2	0,3	77	140	114,3	3,6
125	5"	150	7	2	0,3	77	166	139,7	3,6
150	6"	150	6	2	0,3	80	200	168,3	4,0
200	8"	150	6	2	0,3	80	251	219,1	4,5
250	10"	150	6	2	0,3	80	305	273	5,0
300	12"	150	5	2	0,3	80	361	323,9	5,6

Bellows Material	Design Pressure	Design Temperature
321ss	2.5barg	550°C

Flange Material
Carbon Steel

Design No
PT-004-BAL4.0

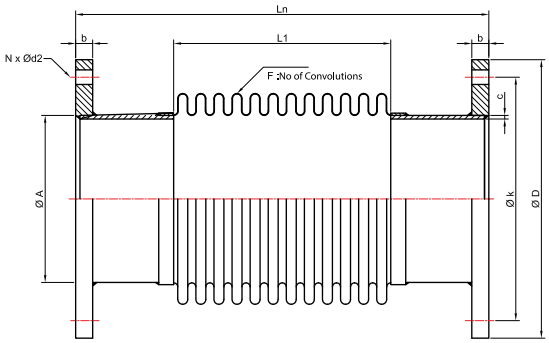

Nominal Diameter (DN)		Length (Ln) (mm)	Bellows					Pipe		Flange			
			Number of Convolutions	Number of Plies	Ply Thickness (mm)	L1 (mm)	OD (mm)	A (mm)	c (mm)	D (mm)	b (mm)	k (mm)	N x d2
40	1 1/2"	150	18	1	0,3	90	60	48,3	2,6	150	16	100	4 x 18
50	2"	150	10	2	0,3	90	78	60,3	2,9	165	16	125	4 x 18
65	2 1/2"	150	10	2	0,3	90	96	76,1	2,9	185	16	145	4 x 18
80	3"	150	10	2	0,3	90	110	88,9	3,2	200	16	160	8 x 18
100	4"	150	7	2	0,3	77	140	114,3	3,6	220	16	180	8 x 18
125	5"	150	7	2	0,3	77	166	139,7	3,6	250	16	210	8 x 18
150	6"	150	6	2	0,3	80	200	168,3	4,0	285	16	240	8 x 22
200	8"	150	6	2	0,3	80	251	219,1	4,5	320	16	280	8 x 18
250	10"	150	6	2	0,3	80	305	273	5,0	375	16	335	12 x 18
300	12"	150	5	2	0,3	80	361	323,9	5,6	440	16	395	12 x 22

Bellows Material	Design Pressure	Design Temperature
321ss	**2.5**barg	**550**°C
Weld end Material: **Carbon Steel**	Design No: **PT-005-BAL5.0**	

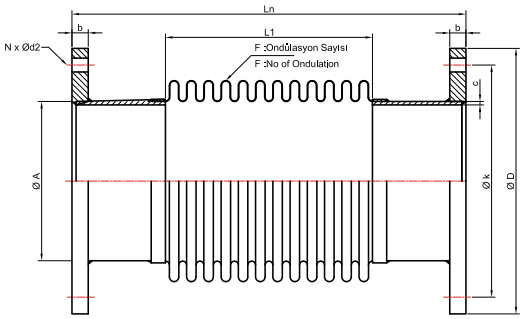

Nominal Diameter (DN)		Length (Ln) (mm)	Bellows: Number of Convolutions	Bellows: Number of Plies	Bellows: Ply Thickness (mm)	Bellows: L1 (mm)	Bellows: OD (mm)	Pipe: A (mm)	Pipe: c (mm)	Flange: D (mm)	Flange: b (mm)	Flange: k (mm)	Flange: N x d2
40	1 1/2"	215	22	1	0,3	105	60	48,3	2,6	150	18	110	4 x 18
50	2"	255	13	2	0,3	120	78	60,3	2,9	165	18	125	4 x 18
65	2 1/2"	255	13	2	0,3	120	96	76,1	2,9	185	18	145	4 x 18
80	3"	255	13	2	0,3	120	110	88,9	3,2	200	20	160	8 x 18
90	3.5"	255	13	2	0,3	120	122	101,6	3,2	220	20	180	8 x 18
100	4"	255	11	2	0,3	120	140	114,3	3,6	220	20	180	8 x 18
125	5"	255	11	2	0,3	120	166	139,7	3,6	250	22	210	8 x 18
150	6"	255	9	2	0,3	120	200	168,3	4,0	285	22	240	8 x 22
175	7"	255	9	2	0,3	120	226	193,7	4,5	315	24	270	8 x 22
200	8"	255	9	2	0,3	120	251	219,1	4,5	340	24	295	8 x 22
250	10"	255	9	2	0,3	120	305	273	5	395	26	350	12 x 22
300	12"	305	9	2	0,3	145	361	323,9	5,6	445	26	400	12 x 22
350	14"	305	9	2	0,3	145	393	355,6	5,6	505	26	460	16 x 22
400	16"	305	9	2	0,3	145	443	406,4	5,6	565	26	515	16 x 26

Bellows Material

321ss

Flange Material

Carbon Steel

Design Pressure

16barg

Design Temperature

550°C

Design No

PT-006-BAL6.0

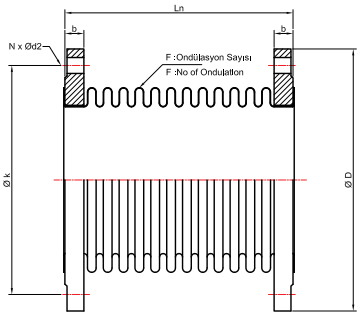

Nominal Diameter (DN)		Length (Ln) (mm)	Bellows				Flange			
			Number of Convolutions	Number of Plies	Ply Thickness (mm)	OD (mm)	D (mm)	b (mm)	k (mm)	N x d2
40	1 1/2"	130	20	1	0,3	60,5	150	16	110	4 x 18
50	2"	130	16	2	0,3	77	165	18	125	4 x 18
65	2 1/2"	130	14	2	0,3	95	185	18	145	4 x 18
80	3"	130	13	2	0,3	111	200	20	160	8 x 18
100	4"	130	12	2	0,3	140	220	20	180	8 x 18
125	5"	130	12	2	0,3	168	250	22	210	8 x 18
150	6"	130	12	2	0,4	200	285	22	240	8 x 22
200	8"	130	8	2	0,4	255	340	24	295	12 x 22
250	10"	130	7	2	0,4	315	395	26	355	12 x 26
300	12"	130	6	2	0,4	372	460	28	410	12 x 26

Bellows Material	Design Pressure	Design Temperature
321ss	16barg	550°C

Flange Material: Carbon Steel

Design No: PT-011-RF30.0, PT-012-RF60.0

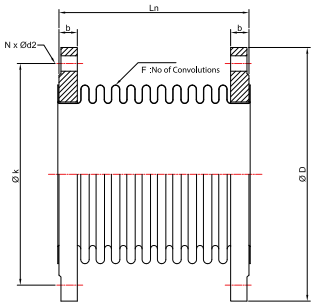

RF 30 AXIAL - 60 AXIAL

Design No: **PT-011-RF30.0**

Nominal Diameter (DN)		Length (Ln) (mm)	Bellows				Flange			
			Number of Convolutions	Number of Plies	Ply Thickness (mm)	OD (mm)	D (mm)	b (mm)	k (mm)	N x d2
40	1 1/2"	120	18	1	0,3	60,5	150	16	110	4 x 18
50	2"	120	14	1	0,4	77	165	18	125	4 x 18
65	2 1/2"	120	12	1	0,4	95	185	18	145	4 x 18
80	3"	120	11	1	0,5	111	200	20	160	8 x 18
100	4"	120	10	1	0,5	140	220	20	180	8 x 18
125	5"	125	10	1	0,6	168	250	22	210	8 x 18
150	6"	130	10	1	0,6	200	285	22	240	8 x 22
200	8"	150	8	1	0,8	255	340	24	295	12 x 22
250	10"	165	8	1	0,8	315	405	26	355	12 x 26
300	12"	170	7	1	0,8	372	460	28	410	12 x 26

Design No: **PT-012-RF60.0**

Nominal Diameter (DN)		Length (Ln) (mm)	Bellows				Flange			
			Number of Convolutions	Number of Plies	Ply Thickness (mm)	OD (mm)	D (mm)	b (mm)	k (mm)	N x d2
65	2 1/2"	180	20	1	0,4	95	185	18	145	4 x 18
80	3"	180	19	1	0,5	111	200	20	160	8 x 18
100	4"	185	18	1	0,5	140	220	20	180	8 x 18
125	5"	190	18	1	0,6	168	250	22	210	8 x 18
150	6"	200	18	1	0,6	200	285	22	240	8 x 22
200	8"	230	14	1	0,8	255	340	24	295	12 x 22
250	10"	245	14	1	0,8	315	405	26	355	12 x 26
300	12"	250	12	1	0,8	372	460	28	410	12 x 26

Bellows Material	Design Pressure	Design Temperature
321ss	16barg	550°C

Flange Material
Carbon Steel

Design No
PT-013-FF30.0
PT-014-FF60.0

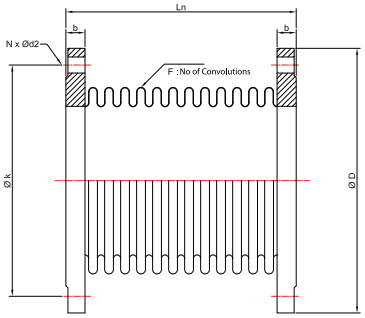

Design No: **PT-013-FF30.0**

Nominal Diameter (DN)		Length (Ln) (mm)	Bellows: Number of Convolutions	Bellows: Number of Plies	Bellows: Ply Thickness (mm)	Bellows: OD (mm)	Flange: D (mm)	Flange: b (mm)	Flange: k (mm)	Flange: N x d2
40	1 1/2"	120	18	1	0,3	60,5	150	16	110	4 x 18
50	2"	120	14	1	0,4	77	165	18	125	4 x 18
65	2 1/2"	120	12	1	0,4	95	185	18	145	4 x 18
80	3"	120	11	1	0,5	111	200	20	160	8 x 18
100	4"	120	10	1	0,5	140	220	20	180	8 x 18
125	5"	125	10	1	0,6	168	250	22	210	8 x 18
150	6"	130	10	1	0,6	200	285	22	240	8 x 22
200	8"	150	8	1	0,8	255	340	24	295	12 x 22
250	10"	165	8	1	0,8	315	405	26	355	12 x 26
300	12"	170	7	1	0,8	372	460	28	410	12 x 26

Design No: **PT-014-FF60.0**

Nominal Diameter (DN)		Length (Ln) (mm)	Bellows: Number of Convolutions	Bellows: Number of Plies	Bellows: Ply Thickness (mm)	Bellows: OD (mm)	Flange: D (mm)	Flange: b (mm)	Flange: k (mm)	Flange: N x d2
65	2 1/2"	180	20	1	0,4	95	185	18	145	4 x 18
80	3"	180	19	1	0,5	111	200	20	160	8 x 18
100	4"	185	18	1	0,5	140	220	20	180	8 x 18
125	5"	190	18	1	0,6	168	250	22	210	8 x 18
150	6"	200	18	1	0,6	200	285	22	240	8 x 22
200	8"	230	14	1	0,8	255	340	24	295	12 x 22
250	10"	245	14	1	0,8	315	405	26	355	12 x 26
300	12"	250	12	1	0,8	372	460	28	410	12 x 26

Bellows Material	Design Pressure	Design Temperature
321ss	2.5barg	550°C
Weld end Material: Carbon Steel	Design No: US1BU-03	

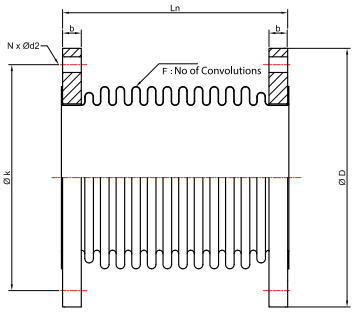

Nominal Diameter (DN)		Length (Ln) (mm)	Bellows			Flange			
			Number of Convolutions	Number of Plies	Ply Thickness (mm)	D (mm)	b (mm)	k (mm)	N x d2
80	3.5"	180	16	2	0,3	200	20	160	8 x 18
100	4"	150	14	2	0,3	220	20	180	8 x 18
125	5"	185	13	2	0,3	250	22	210	8 x 18
150	6"	200	13	2	0,3	285	22	240	8 x 22
175	7"	205	13	2	0,3	315	22	270	8 x 22
200	8"	185	12	2	0,3	320	16	280	8 x 18
250	10"	185	11	2	0,4	375	16	335	12 x 18
300	12"	180	9	2	0,4	440	16	395	12 x 22
350	14"	180	9	2	0,4	490	16	445	12 x 22
400	16"	220	11	2	0,4	540	16	495	16 x 22
450	18"	180	8	2	0,4	595	16	550	16 x 22
500	20"	230	9	2	0,4	645	16	600	20 x 22
550	22"	240	9	2	0,4	703	20	650	20 x 22
600	24"	230	8	2	0,4	754	20	700	20 x 22
700	28"	230	7	2	0,4	856	20	800	24 x 22
800	32"	230	7	2	0,5	958	20	900	24 x 22
900	36"	230	6	2	0,5	1060	20	1010	28 x 22
1000	40"	230	5	2	0,5	1162	20	1110	32 x 22
1100	44"	230	5	2	0,6	1266	20	1210	32 x 22
1200	48"	230	5	2	0,6	1366	20	1310	36 x 22

Bellows Material	Design Pressure	Design Temperature
321ss	2.5barg	550°C
Flange Material: Carbon Steel	Design No: US3BU-03	

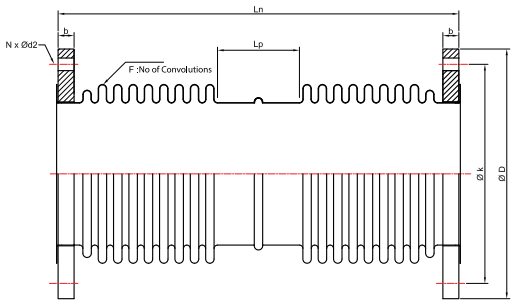

Nominal Diameter (DN)		Length (Ln) (mm)	LP (mm)	Bellows			Flange			
				Number of Convolutions	Number of Plies	Ply Thickness (mm)	D (mm)	b (mm)	k (mm)	N x d2
80	3.5"	365	2 x 11	2	0,3	110	200	20	160	8 x 18
100	4"	315	2 x 7	2	0,3	142	220	20	180	8 x 18
125	5"	305	2 x 8	2	0,3	169	250	22	210	8 x 18
150	6"	370	2 x 8	2	0,3	197	285	22	240	8 x 22
175	7"	375	2 x 7	2	0,3	221	315	22	270	8 x 22
200	8"	335	116	2 x 7	2	0,4	320	16	280	8 x 18
250	10"	335	116	2 x 7	2	0,4	375	16	335	12 x 18
300	12"	310	88	2 x 6	2	0,4	440	16	395	12 x 22
350	14"	310	88	2 x 6	2	0,4	490	16	445	12 x 22
400	16"	375	115	2 x 7	2	0,5	540	16	495	16 x 22
450	18"	380	120	2 x 6	2	0,5	595	16	550	16 x 22
500	20"	350	115	2 x 5	2	0,5	645	16	600	20 x 22
550	22"	360	115	2 x 5	2	0,5	703	20	650	20 x 22
600	24"	440	144	2 x 6	2	0,5	754	20	700	20 x 22
700	28"	465	169	2 x 5	2	0,5	856	20	800	24 x 22
800	32"	465	169	2 x 5	2	0,5	958	20	900	24 x 22
900	36"	465	169	2 x 4	2	0,5	1060	20	1010	28 x 22
1000	40"	465	169	2 x 3	2	0,5	1162	20	1110	32 x 22
1100	44"	465	169	2 x 3	2	0,6	1266	20	1210	32 x 22
1200	48"	465	169	2 x 3	2	0,6	1366	20	1310	36 x 22

Design Pressure

up to 1 barg

Design Temperature

850°C

They can be designed and manufactured in various types in accordance with required operating conditions.

Advantages
High vibration and noise elimination
Compensation on thermal expansion
High flexibility
Working temperature up to 850°C
Minimum reaction force

FABRIC

Layers of Fabric Expansion Joints

1- Reinforcing layer for flange.
2- Flexible outer layer.
3- Sealing layer.
4- High temperature heat insulation layer.
5- Heat insulation layer.
6- Strength and resistance layer.

They can be designed and manufactured in accordance with required operating conditions.

RECTANGULAR

Rectangular expansion joints are used when duct cross sections are rectangular. They are common in gas turbine exhaust systems, flue gas ducts and hot gas, large volume duct systems.

Oversized assemblies can be shipped in sections for field installation.

Single Mitered Corners are the most common and economical type to manufacture. They are usually preferred in vibration free applications.

Rectangular expansion joints can be manufactured from 300 series stainless steels or various carbon steel grades.

POLITEKNIK PART NUMBER DESCRIPTIONS

Code Example

DN300 - KB - DF - 6 - 150 - KLT - 316

DN - Inlet Type - Outlet Type - Design Pressure - Length - Accessories - Bellows Material

DN

Nominal Diameter

Inlet Type

KB - Weld end
SF - Fixed Flange
DF - Rotating Flange
DB - Externally Pressurized
U - Universal
SP - Special

Outlet Type

KB - Weld end
SF - Fixed Flange
DF - Rotating Flange
DB - Externally Pressurized
U - Universal
SP - Special

Design Pressure

Pressure which will be used for design

Length

Total length of expansion joint

Accessories

H - Hinged
K - Outer Cover
R - Limit Rod
E - Elbow Pressure Balanced
G - Gimbal
I - Inline Pressure Balanced
L - Liner (Inner Sleeve)
T - Tie Rod

Bellows Material

304/304L
316/316L
321
309S
310S
INC625-Alloy625
904L
2205-DUPLEX 2205
Etc.

POLITEKNIK
A KLINGER Company

İst. E.T. Serbest Bölgesi
6. Sokak No:111 34957
Tuzla - İstanbul / TURKEY
T: +90 216 540 19 49
F: +90 216 314 36 16

www.politeknik-klinger.com

fenomen.web.tr

issue code: 201610012